G399/G288

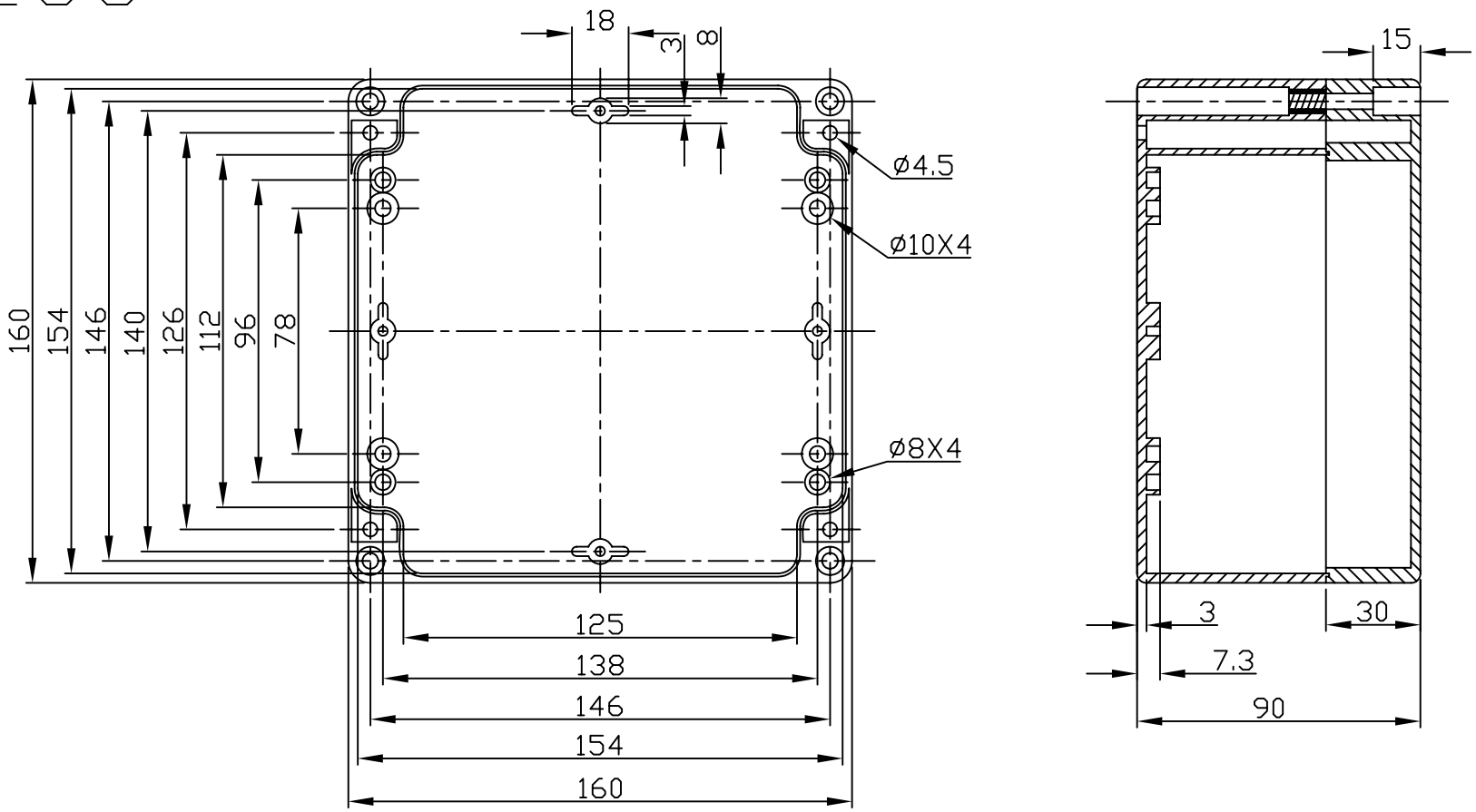

According to ISO 2768-m	
Measuring DIM.=L	Tolerance
0.5<L≦3.0 mm	±0.1 mm
3.0<L≦6.0 mm	±0.1 mm
6.0<L≦30.0 mm	±0.2 mm
30.0<L≦120.0 mm	±0.3 mm
120.0<L≦400.0 mm	±0.5 mm
400.0<L≦1000.0 mm	±0.8 mm

宣又實業有限公司 GAINTA INDUSTRIES LTD.	設計 DES'D BY	繪圖 DRA'D BY	核圖 CHK'D BY	比例 SCALE	日期 DATE	材質 MATE.	圖名 TITLE:	圖號 DWG NO.:	版次 REVISION	說明 DESCRIPTION
		Spencer			Sep.20,2006	ABS,PC	G399,G288		B	